SUSTAINABLE 3D PRINT MATERIALS

REFLOW PRODUCT OVERVIEW

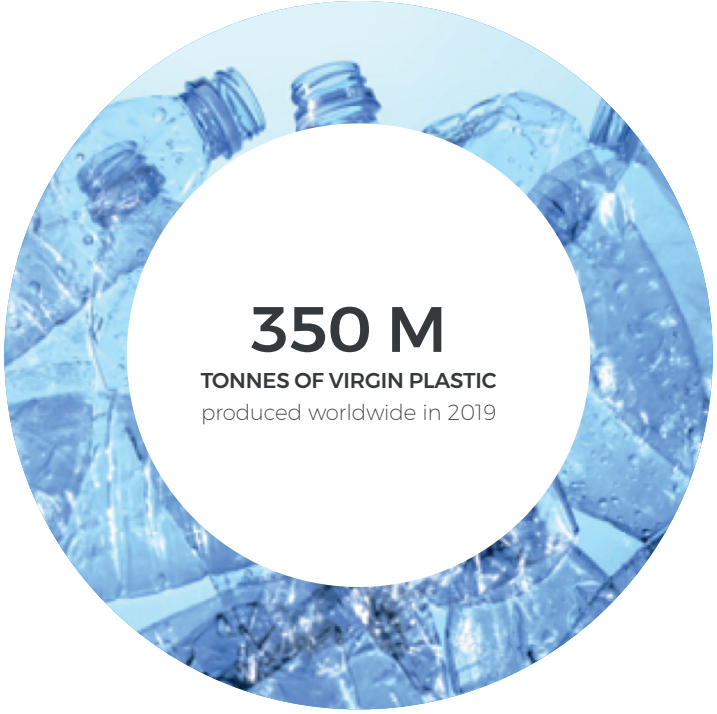

SUSTAINABILITY IS A SCALABLE COMMERCIAL OPPORTUNITY

Over 350 million tonnes of virgin plastic was produced globally in 2019 but shockingly, less that 20% of this recycled. As the 3D printing industry rapidly expands each year, the materials market is increasingly becoming a contributor to the issue of plastic pollution.

As the general population mobilises around environmental issues, manufacturers and consumers within our industry are now prioritising sustainability as a key factor to consider, alongside quality and pricing.

When fabricators use Reflow materials, a source traceable sustainable input that delivers high performance, their creations acquire a tangible competitive advantage in the marketplace.

The message is clear. Consumers want to know that the products they purchase aren't harming the earth, and this consideration is now weighing heavily on their decision making.

1 in 3

Global consumers actively choose brands they believe are doing real environmental good.

80%

Of professional 3DP designers are actively seeking high performance sustainable 3D printing materials

14%

Of filament producers offer recycled 3D printing materials as part of their portfolio in 2019

WE TRANSFORM PLASTIC WASTE INTO THE BUILDING BLOCKS OF SUSTAINABLE DESIGN

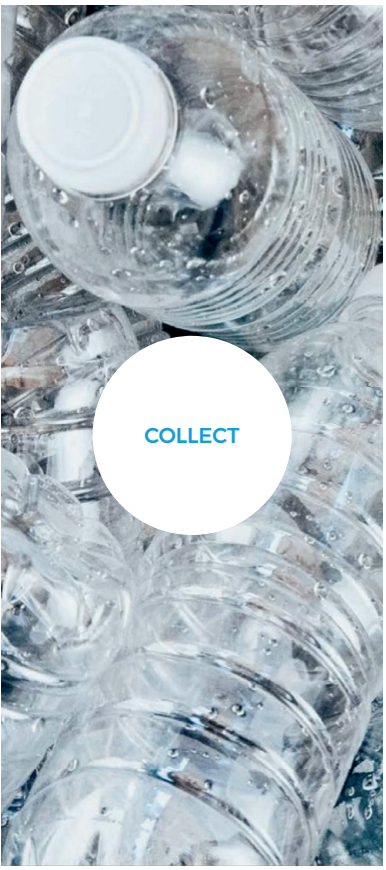

+ We tackle plastic pollution while you create outstanding work and source our inputs from leading European recyclers.

+ Our recycled materials have been put to strictest of internal and external performance tests and consistently pass with flying colours.

+ Our materials are universally compatible and we go the extra mile to offer you the technical and production.
+ support you need.

www.reflowfillament.com

letstalk@reflowfillament.com

PRODUCT PORTFOLIO

DEVELOPED

rPETG

+ Medical tray waste
+ Incredibly clean stream
+ Durable, heat resistant

rPLA

+ Bioderived plastic
+ No.1 used 3DP material
+ Easy to print, visual

rPMMA

+ Eyewear lens waste
+ Single use plastic
+ Hard and translucent

IN DEVELOPMENT

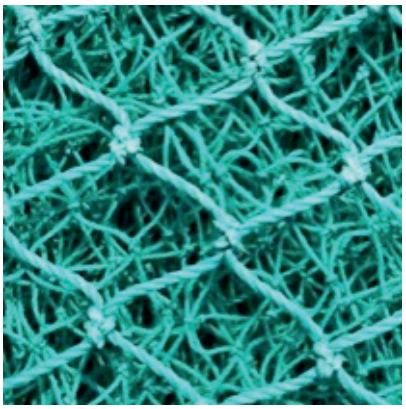

rPP

+ Recycled fishing nets
+ Rare marine plastic
+ Flexible yet tough

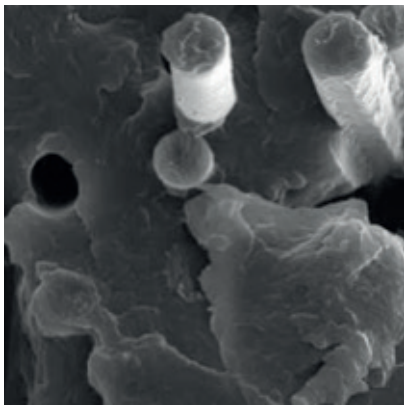

rPA x CF

+ Dismantled wind turbines
+ Engineering grade material
+ Incredibly strong, flexible

At Reflow, we believe that sustainability should be the go-to option for all creators using 3D printing. That choice should be simple for you, tailored to your application and involve no compromise on the quality of your creations.

We've pioneered an approach to recycle discarded plastic into a range of exceptionalsustainable materials for 3D printing. We source the highest quality streams from leading recyclers and identify potential steams within large organisations, then work closely with scientific institutions to optimise our range.

When you print with Reflow, you're supporting an established network of recyclers, makers and designers to tackle plastic pollution while co-creating meaningful work.

WHAT WE OFFER YOU

UNIQUELY SUSTAINABLE PRODUCT

+ Sourced with leading European recyclers
+ The filament of choice for KLM Royal Dutch Airlines Engineering & Maintenance
+ Part of the Ultimaker Material Alliance

A GREAT CUSTOMER STORY

+ Access to Reflow marketing materials for exhibition and showcasing events
+ Source transparency and access to recycling certifications

OUTSTANDING CUSTOMER SUPPORT

+ Technical assistance provided by our all star tech team
+ In house expertise in extrusion, 3D printing and quality testing

GREAT TERMS & PRODUCT CUSTOMISATION

+ Great price point for sustainable high performance materials
+ Volume discounting applied
+ Custom colouring at orders of 40 kg or over

TESTIMONIALS

Marjolein Deun, Ace & Tate

"Thanks to 3D printing we've been able to reduce the use of material and shipping in our prototyping stage. We are even happier using it since we are now able to use filament of recycled material."

Guy Snover, Cyrc

"When you look hard enough at any material, you find sustainability challenges. A 100% recycled filament is as good as it gets. Its great quality and consistency so I can actually trust that my products will come out good every time."

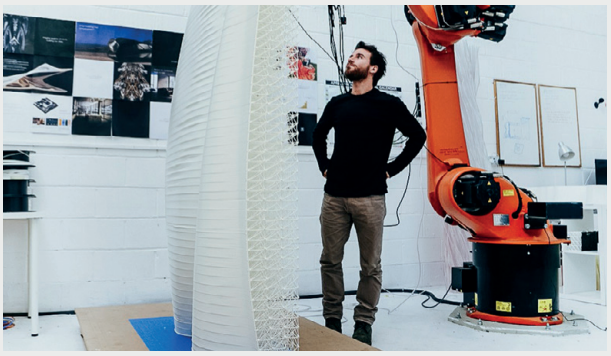

Daghan Cam, AiBuild

"We strive to work with like-minded partners. Working with the team at Reflow and using their sustainable materials, enabled us to achieve unprecedented production quality without sacrificing our environmental responsibilities."

rPETG
Pastel Collection

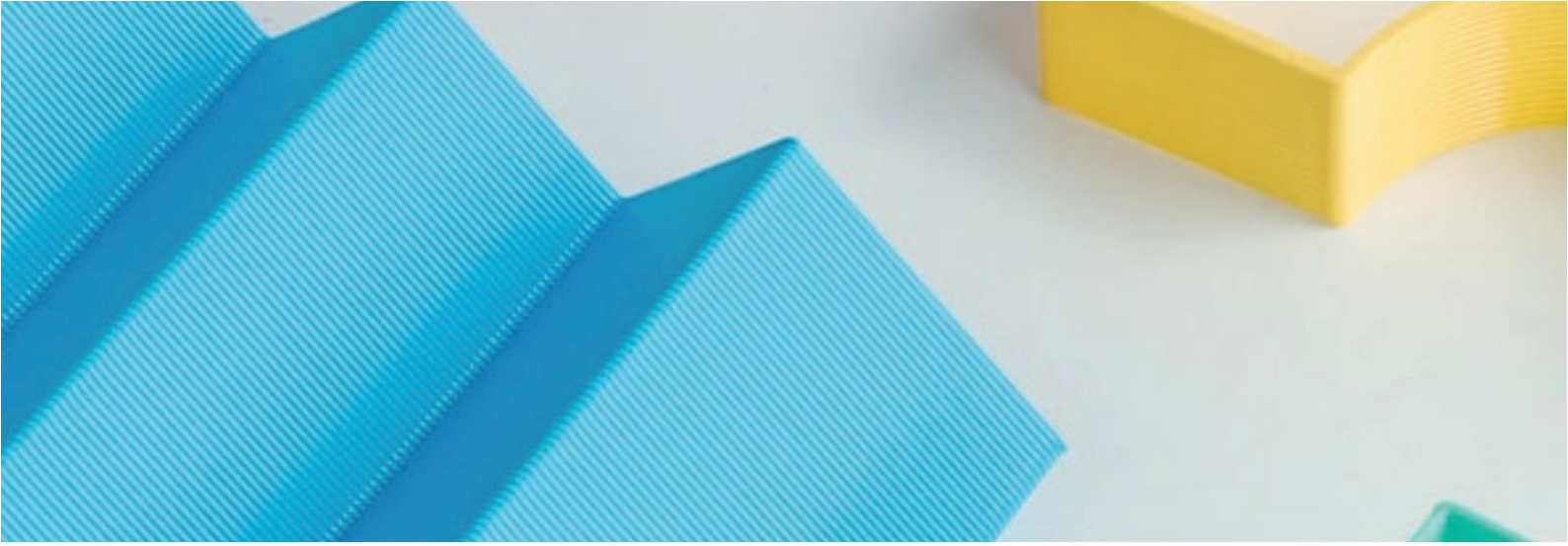

PRODUCT RANGE

rPETG

colour: **White**
diameter: 1.75, 2.85
roll size: 1 kg

colour: **Black**
diameter: 1.75, 2.85
roll size: 1 kg

colour: **Aqua**
diameter: 1.75, 2.85
roll size: 1 kg

colour: **Honey**
diameter: 1.75, 2.85
roll size: 1 kg

colour: **Mint**
diameter: 1.75, 2.85
roll size: 1 kg

colour: **Coral**
diameter: 1.75, 2.85
roll size: 1 kg

***Custom colouring available with min order quantity of 40kg**

TECHNICAL DATA SHEET

rPETG

Name	Recycled PETG
Chemical name	Polyethylene Terephthalate - Glycol Modified
Source of plastic	The Netherlands
Description	Our flagship rPETG is sourced from leading local recyclers. It's durable and easy to use, with exceptional visual and mechanical performance.
Available colours	white, black, aqua, mint, honey, coral

FILAMENT SPECIFICATIONS

Diameter	1.75 mm. ±0.05mm / 2.85 mm. ±0.07mm
Roundness	≥ 98%
Net filament weight	1 KG
Filament length	**~357m / ~137m**

PRINTER SETTING RECOMMENDATION

Nozzle temperature	225°C ±10°C
Bed temperature	75°C ±5°C
Bed modification	glue / hairspray
Fan speed	30 - 100% (varies based on print geometry)
Print speed	30 - 50 mm/s
Retraction distance	10 mm
Retraction speed	35-45 mm/s
Drying recommendation	55˚C for 3 to 4 hours in a hot air or vacuum oven

MATERIAL PROPERTIES

	unit	value	method
Density	g/cm^3	1.27	ASTM D1505
Izod Impact strength	kJ/m^2	6.2	ISO 180 @23°C
Tensile stress at yield	MPa	50	ISO 527
Vicat softening temperature	°C	85	ASTM D1525
Deflection temperature	MPa	64	ASTM D648 @1.82 MPa
Elongation at yield	%	100	ISO 527
Melt flow rate (225 ˚C/1.20 kg)	g/10 min	13	ISO 1133-2
Glass transition	°C	79.2	ISO 11357-2

MECHANICAL PROPERTIES

	unit	value	method
Tensile modulus	MPa	1730±203	ISO 527
Tensile strength	MPa	38.4	ISO 527
Tensile stress at break	MPa	36.9	ISO 527
Tensile strain at break	%	3.3	ISO 527
Flexural modulus	MPa	1772±32	ISO 178
Flexural strength	MPa	63.6	ISO 178
Flexural stress at break	MPa	58.1	ISO 178
Flexural strain at break	%	4.2	ISO 178

SAMPLE PREPARATION AND TESTING CONDITIONS

Sample preparation conditions:

Ultimaker 2+ with 0.4 mm nozzle was applied for preparing both tensile and flexural specimens.
Line width: 0.35 mm | layer height: 0.2 mm | printing speed: 20 mm/s | retraction distance and speed: 9 mm and 35 mm/s | printing temperature: 230 °C | fan speed: 40% | infill percentage: 100% | outline overlap: 35%

Testing conditions:

Five samples were tested and the value shared was the average value.
For tensile specimens, they were printed flatly (x-y direction) and the printing direction was in line with the tensile stretching direction. As for the flexural specimens, the printing direction was perpendicularly to the test direction.

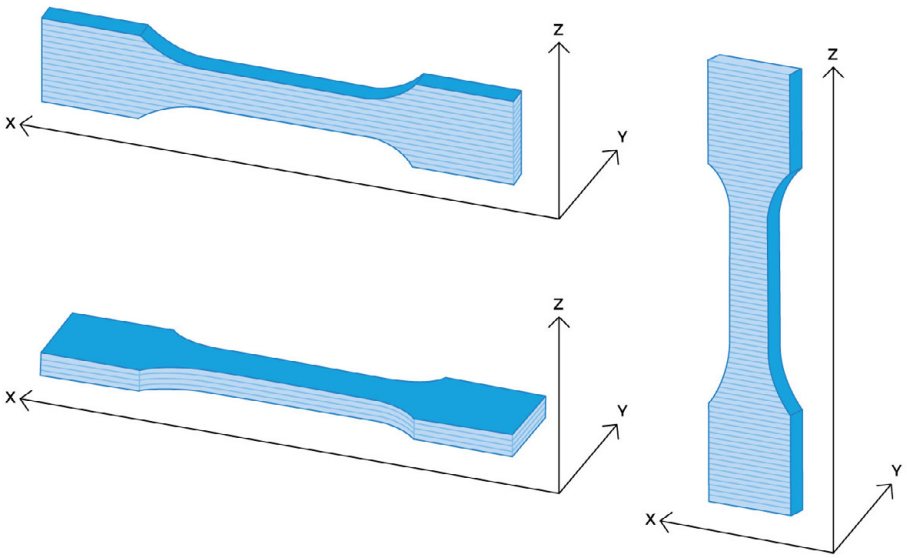

DISCLAIMER

The values and recommendations provided herein are given or accepted at your own risk. In view of variations in maintenance, processing, and neither Reflow nor its affiliates make any warranty relating to it or because of it. Neither Reflow nor its affiliates shall be responsible for the use of this information, or of any product, method or apparatus mentioned, and you must make your own determination of its suitability and completeness for your own use, for the protection of the environment, and for the health and safety of your employees and purchasers of your products. No warranty is made of the merchantability or fitness of any product; and nothing herein waives any of Reflow's conditions of sale. Specifications are subject to adaptation without prior notice

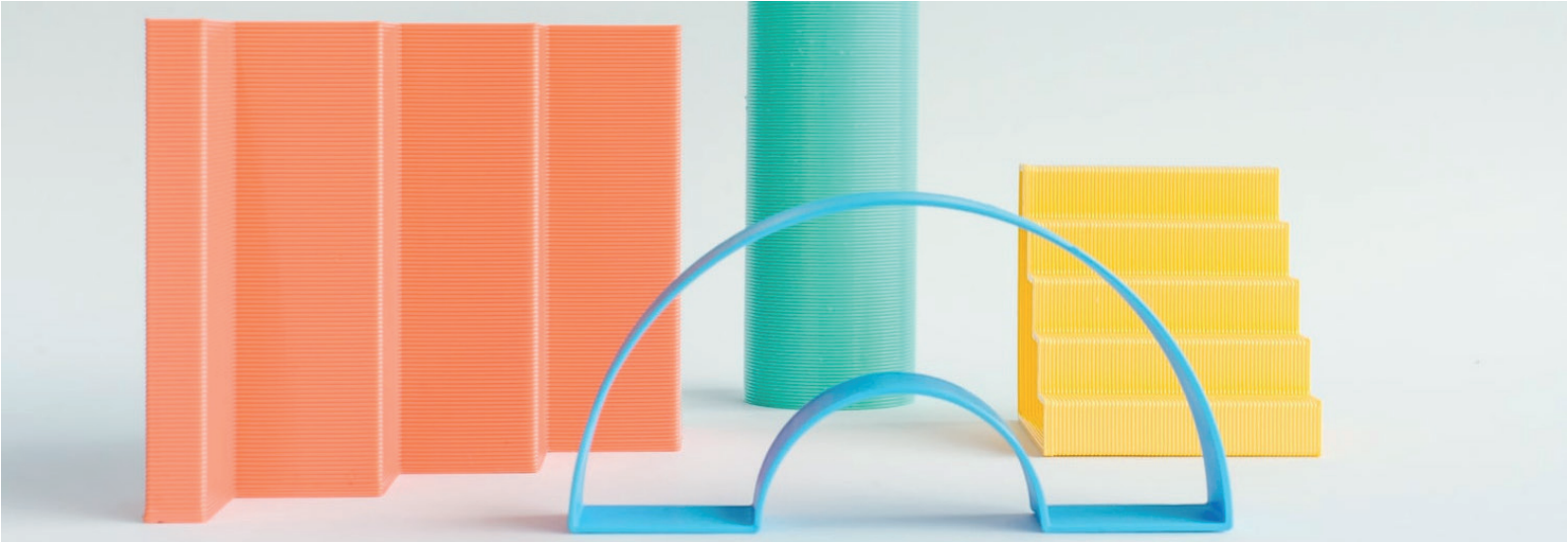

PRICING OVERVIEW

At Reflow we believe that strong partnerships are the basis for transformative business. We present a unique and ever growing product offering with you while promoting sustainability together in our industry.

We apply volume discounting across each product variant. The pricing displayed below is a guide, however for orders above 500 kg and for repeat business, we work with you to find the optimal terms to grow our collaboration.

AMOUNT	PRICE
1 kg	€28
2 - 4 kg	€26
5 - 10 kg	€24
11 - 49 kg	€22
50 - 99 kg	€20
100 - 249 kg	€19
250 - 499 kg	€18
500 kg +	on request

*The prices displayed are list prices and are subject to change without notice or further trade discount. We make every effort to provide you with the most accurate, up-to-date information but prices may alter due to unforeseen cost increases of imported products, raw materials, or currency fluctuations.

rPETG
Seaglass Collection

PRODUCT RANGE

rPETG

colour: **Nautical Blue**
diameter: 1.75, 2.85
roll size: 1 kg

colour: **Seafoam Green**
diameter: 1.75, 2.85
roll size: 1 kg

colour: **Midsummer Glow**
diameter: 1.75, 2.85
roll size: 1 kg

colour: **Arctic Breeze**
diameter: 1.75, 2.85
roll size: 1 kg

colour: **Dark Emerald**
diameter: 1.75, 2.85
roll size: 1 kg

colour: **Burnt Amber**
diameter: 1.75, 2.85
roll size: 1 kg

***Custom colouring available with min order quantity of 40kg**

TECHNICAL DATA SHEET

rPETG

Name	Recycled PETG
Chemical name	Polyethylene Terephthalate - Glycol Modified
Source of plastic	The Netherlands
Description	Our flagship rPETG is sourced from leading local recyclers. It's durable and easy to use, with exceptional visual and mechanical performance.
Available colours	nautical blue, seafoam green, midsummer glow, arctic breeze, dark emerald, burnt amber

FILAMENT SPECIFICATIONS

Diameter	1.75 mm. ±0.05mm / 2.85 mm. ±0.07mm
Roundness	≥ 98%
Net filament weight	1 KG
Filament length	~357m / ~137m

PRINTER SETTING RECOMMENDATION

Nozzle temperature	225°C ±10°C
Bed temperature	75°C ±5°C
Bed modification	glue / hairspray
Fan speed	30 - 100% (varies based on print geometry)
Print speed	30 - 50 mm/s
Retraction distance	10 mm
Retraction speed	35-45 mm/s
Drying recommendation	55˚C for 3 to 4 hours in a hot air or vacuum oven

MATERIAL PROPERTIES

	unit	value	method
Density	g/cm^3	1.27	ASTM D1505
Izod Impact strength	kJ/m^2	6.2	ISO 180 @23°C
Tensile stress at yield	MPa	50	ISO 527
Vicat softening temperature	°C	85	ASTM D1525
Deflection temperature	MPa	64	ASTM D648 @1.82 MPa
Elongation at yield	%	100	ISO 527
Melt flow rate (225 ˚C/1.20 kg)	g/10 min	13	ISO 1133-2
Glass transition	°C	79.2	ISO 11357-2

MECHANICAL PROPERTIES

	unit	value	method
Tensile modulus	MPa	1730±203	ISO 527
Tensile strength	MPa	38.4	ISO 527
Tensile stress at break	MPa	36.9	ISO 527
Tensile strain at break	%	3.3	ISO 527
Flexural modulus	MPa	1772±32	ISO 178
Flexural strength	MPa	63.6	ISO 178
Flexural stress at break	MPa	58.1	ISO 178
Flexural strain at break	%	4.2	ISO 178

SAMPLE PREPARATION AND TESTING CONDITIONS

Sample preparation conditions:

Ultimaker 2+ with 0.4 mm nozzle was applied for preparing both tensile and flexural specimens.
Line width: 0.35 mm | layer height: 0.2 mm | printing speed: 20 mm/s | retraction distance and speed: 9 mm and 35 mm/s | printing temperature: 230 °C | fan speed: 40% | infill percentage: 100% | outline overlap: 35%

Testing conditions:

Five samples were tested and the value shared was the average value.
For tensile specimens, they were printed flatly (x-y direction) and the printing direction was in line with the tensile stretching direction. As for the flexural specimens, the printing direction was perpendicularly to the test direction.

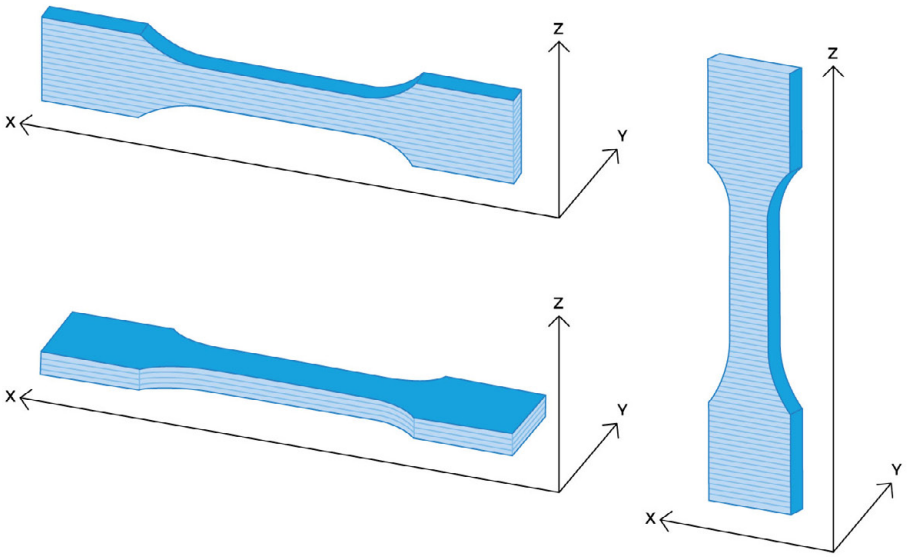

DISCLAIMER

The values and recommendations provided herein are given or accepted at your own risk. In view of variations in maintenance, processing, and neither Reflow nor its affiliates make any warranty relating to it or because of it. Neither Reflow nor its affiliates shall be responsible for the use of this information, or of any product, method or apparatus mentioned, and you must make your own determination of its suitability and completeness for your own use, for the protection of the environment, and for the health and safety of your employees and purchasers of your products. No warranty is made of the merchantability or fitness of any product; and nothing herein waives any of Reflow's conditions of sale. Specifications are subject to adaptation without prior notice

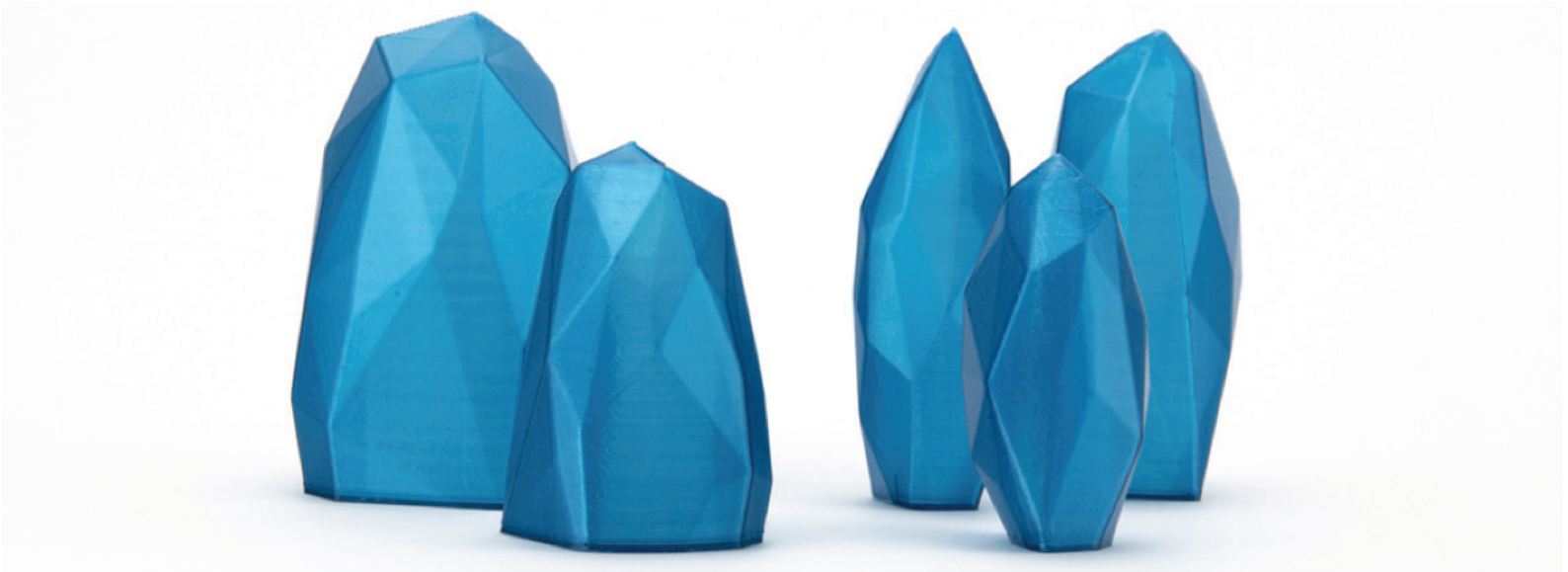

PRICING OVERVIEW

At Reflow we believe that strong partnerships are the basis for transformative business. We present a unique and ever growing product offering with you while promoting sustainability together in our industry.

We apply volume discounting across each product variant. The pricing displayed below is a guide, however for orders above 500 kg and for repeat business, we work with you to find the optimal terms to grow our collaboration.

AMOUNT	PRICE
1 - 5 kg	€30
6 - 10 kg	€28
11 - 20 kg	€26
21 - 49 kg	€25
50-99 kg	€23
100-249 kg	€20
250-499 kg	€19
500 kg +	on request

*The prices displayed are list prices and are subject to change without notice or further trade discount. We make every effort to provide you with the most accurate, up-to-date information but prices may alter due to unforeseen cost increases of imported products, raw materials, or currency fluctuations.

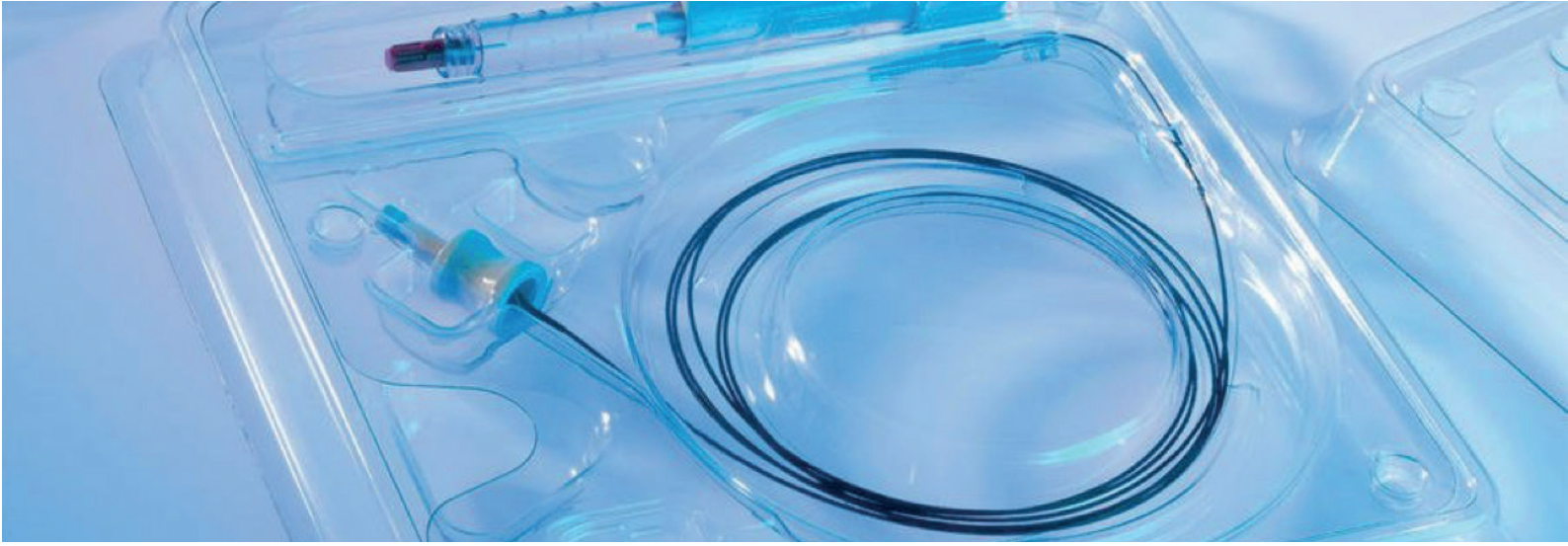

TRACEABILITY

rPETG

Name	Recycled PETG
Chemical name	Polyethylene Terephthalate - Glycol Modified
Geographic location	Flevoland, The Netherlands
Waste category	Post Industrial
Type of product	Thermoformed medical trays

Over 359 million tonnes of virgin plastic was produced globally in 2019 but only 18% of this material is recycled. This material has an average life cycle of less than one year but it lives on for centuries, polluting our natural habitats and consequently, our food supply. As the 3D printing industry rapidly expands each year, the materials market is becoming a significant contributor to the production of new virgin plastic and plastic pollution.

At Reflow, we're committed to building an effective after use economy for discarded plastic as well as developing truly biodegradable materials. Our r-PETG filament delivers outstanding performance while using a fully recycled and traceable input.

The r-PETG filament you are printing with is derived from a consistent stream of thermoformed, medical tray waste that are recycled in Flevoland with our partnering recycler before arriving at our facility in North Amsterdam where extrusion takes place.

By choosing Reflow you are supporting a growing ecosystem of recyclers, engineers, entrepreneurs and designers, all committed to making 3D printing sustainable.

rPLA
Monochrome Collection

PRODUCT RANGE

rPLA

colour: **Natural**
diameter: 1.75, 2.85
roll size: 1 kg

colour: **Black**
diameter: 1.75, 2.85
roll size: 1 kg

colour: **White**
diameter: 1.75, 2.85
roll size: 1 kg

***Custom colouring available with min order quantity of 40kg**

TECHNICAL DATA SHEET

rPLA

Name	Recycled PLA
Chemical name	Recycled polylactide
Source of plastic	Benelux
Description	Reflow PLA filament is made from mechanically recycled PLA which are biodegradable and renewable. It is safe, eco-friendly, easy to print, and fits requirements for both novices and gurus.
Available colours	black, white, natural

FILAMENT SPECIFICATIONS

Diameter	1.75 mm. ±0.05mm / 2.85 mm. ±0.07mm
Roundness	≥ 98%
Net filament weight	1 KG
Filament length	~357m / ~137m

PRINTER SETTING RECOMMENDATION

Nozzle temperature	215 - 225°C
Bed temperature	40 - 70°C
Fan speed	0 - 100% (varies based on print geometry)
Print speed	30 - 40 mm/s, up to 150 mm/s
Retraction distance	4 - 10 mm
Retraction speed	35-45 mm/s
Drying recommendation	50 °C in a hot air or vacuum oven for 5 to 8 hours

MATERIAL PROPERTIES

	unit	value	method
Density	g/cm^3	1.24	ASTM D1505
Izod Impact strength	kJ/m^2	4.5	ISO 180 @25°C
Tensile modulus	MPa	3000	ISO 527
Flexural modulus	MPa	3120	ISO 178
Melt flow rate (190 ˚C/2.16 kg)	g/10 min	3-7	ISO 1133
Glass transition	°C	60.9	ISO11357, 10 ˚C /min
Peak melting temperature	°C	164.3	ISO11357, 10 ˚C /min

MECHANICAL PROPERTIES

	unit	value	method
Tensile modulus	MPa	3105±53.16	ISO 527
Tensile strength	MPa	59.2	ISO 527
Tensile stress at break	MPa	59.1	ISO 527
Tensile strain at break	%	2,16	ISO 527
Flexural modulus	MPa	3200±91	ISO 178
Flexural strength	MPa	87.2	ISO 178
Flexural stress at break	MPa	84.6	ISO 178
Flexural strain at break	%	3.6	ISO 178

SAMPLE PREPARATION AND TESTING CONDITIONS

Sample preparation conditions:

Ultermaker 2+ with 0.4 mm nozzle was applied for preparing both tensile and flexural specimens. Line width: 0.35 mm | layer height: 0.2 mm | Printing speed: 15 mm/s | retraction distance and speed: 4 mm and 40 mm/s | printing temperature : 220 °C

Testing conditions:

Five samples were tested and the value shared was the average value.
For tensile specimens, they were printed flatly (x-y direction) and the printing direction was in line with the tensile stretching direction. As for the flexural specimens, the printing direction was perpendicularly to the test direction.

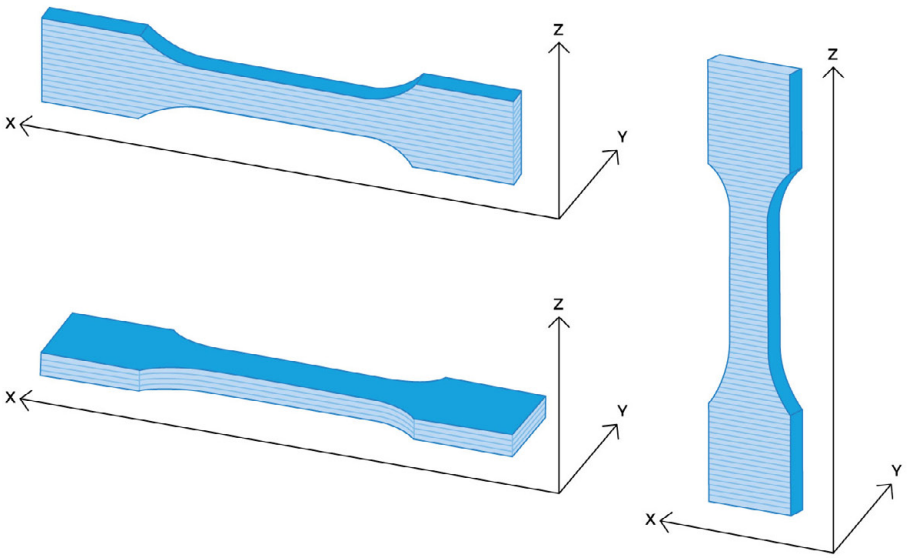

DISCLAIMER

The values and recommendations provided herein are given or accepted at your own risk. In view of variations in maintenance, processing, and neither Reflow nor its affiliates make any warranty relating to it or because of it. Neither Reflow nor its affiliates shall be responsible for the use of this information, or of any product, method or apparatus mentioned, and you must make your own determination of its suitability and completeness for your own use, for the protection of the environment, and for the health and safety of your employees and purchasers of your products. No warranty is made of the merchantability or fitness of any product; and nothing herein waives any of Reflow's conditions of sale. Specifications are subject to adaptation without prior notice.

PRICING OVERVIEW

At Reflow we believe that strong partnerships are the basis for transformative business. We present a unique and ever growing product offering with you while promoting sustainability together in our industry.

We apply volume discounting across each product variant. The pricing displayed below is a guide, however for orders above 100 kg and for repeat business, we work with you to find the optimal terms to grow our collaboration.

AMOUNT	PRICE
1 - 24 kg	€22
25 - 49 kg	€21
50 - 74 kg	€20
75 - 99 kg	€19
100 kg +	on request

*The prices displayed are list prices and are subject to change without notice or further trade discount. We make every effort to provide you with the most accurate, up-to-date information but prices may alter due to unforeseen cost increases of imported products, raw materials, or currency fluctuations.

SOURCE TRACEABILITY

rPETG

Name	
Chemical name	
Geographic location	Recycled PLA
Waste category	Polylactic acid, or polylactide
Type of product	Benelux, Europe
	Post Industrial
	Food Packaging

PLA or Polylactic acid is a bioderived plastic and the leading filament choice for creators. Our materials begin life as cornstarch. While PLA can be broken down at the end of life, it does not naturally decompose at speed without industrial composting assistance. As a result, we take PLA packaging and recycle it to create rPLA filament, extending it's life by another cycle. Our rPLA is sourced from a consistent stream of recycled food packaging waste used in fruit boxes, straws and containers. It is collected, sorted and pre processed by a leading recycler in the Benelux region.

MATTE rPLA
Earth Tones Collection

PRODUCT RANGE

MATTE rPLA

colour: **Ochre**
diameter: 1.75, 2.85
roll size: 1 kg

colour: **Sage**
diameter: 1.75, 2.85
roll size: 1 kg

colour: **Terracotta**
diameter: 1.75, 2.85
roll size: 1 kg

colour: **Blossom**
diameter: 1.75, 2.85
roll size: 1 kg

colour: **Eggshell**
diameter: 1.75, 2.85
roll size: 1 kg

colour: **Cobalt**
diameter: 1.75, 2.85
roll size: 1 kg

*Custom colouring available with min order quantity of 40kg

TECHNICAL DATA SHEET

MATTE rPLA

Name	PLA
Chemical name	Recycled polylactide
Source of plastic	Benelux
Description	Reflow PLA filament is made from mechanically recycled PLA which are biodegradable and renewable. It is safe, eco-friendly, easy to print, and fits requirements for both novices and gurus.
Available colours	ochre, terracotta, eggshell, sage, blossom, cobalt

FILAMENT SPECIFICATIONS

Diameter	1.75 mm. ±0.05mm / 2.85 mm. ±0.07mm
Roundness	≥ 98%
Net filament weight	1 KG
Filament length	~357m / ~137m

PRINTER SETTING RECOMMENDATION

Nozzle recommendation	Hardened steel nozzle
Nozzle temperature	215 - 225°C
Bed temperature	40 - 70°C
Fan speed	0 - 100% (varies based on print geometry)
Print speed	30 - 40 mm/s, up to 150 mm/s
Retraction distance	4 - 10 mm
Retraction speed	35-45 mm/s
Drying recommendation	50 °C in a hot air or vacuum oven for 5 to 8 hours

MATERIAL PROPERTIES

	unit	value	method
Density	g/cm^3	1.24	ASTM D1505
Izod Impact strength	kJ/m^2	4.5	ISO 180 @25°C
Tensile modulus	MPa	3000	ISO 527
Flexural modulus	MPa	3120	ISO 178
Melt flow rate (190 ˚C/2.16 kg)	g/10 min	3-7	ISO 1133
Glass transition	°C	59.8	ISO11357, 10 ˚C /min
Peak melting temperature	°C	164.3	ISO11357, 10 ˚C /min

MECHANICAL PROPERTIES

	unit	value	method
Tensile modulus	MPa	3105±53.16	ISO 527
Tensile strength	MPa	59.2	ISO 527
Tensile stress at break	MPa	59.1	ISO 527
Tensile strain at break	%	2,16	ISO 527
Flexural modulus	MPa	3200±91	ISO 178
Flexural strength	MPa	87.2	ISO 178
Flexural stress at break	MPa	84.6	ISO 178
Flexural strain at break	%	3.6	ISO 178

SAMPLE PREPARATION AND TESTING CONDITIONS

Sample preparation conditions:

Ultermaker 2+ with 0.4 mm nozzle was applied for preparing both tensile and flexural specimens. Line width: 0.35 mm | layer height: 0.2 mm | Printing speed: 15 mm/s | retraction distance and speed: 4 mm and 40 mm/s | printing temperature : 220 °C

Testing conditions:

Five samples were tested and the value shared was the average value.
For tensile specimens, they were printed flatly (x-y direction) and the printing direction was in line with the tensile stretching direction. As for the flexural specimens, the printing direction was perpendicularly to the test direction.

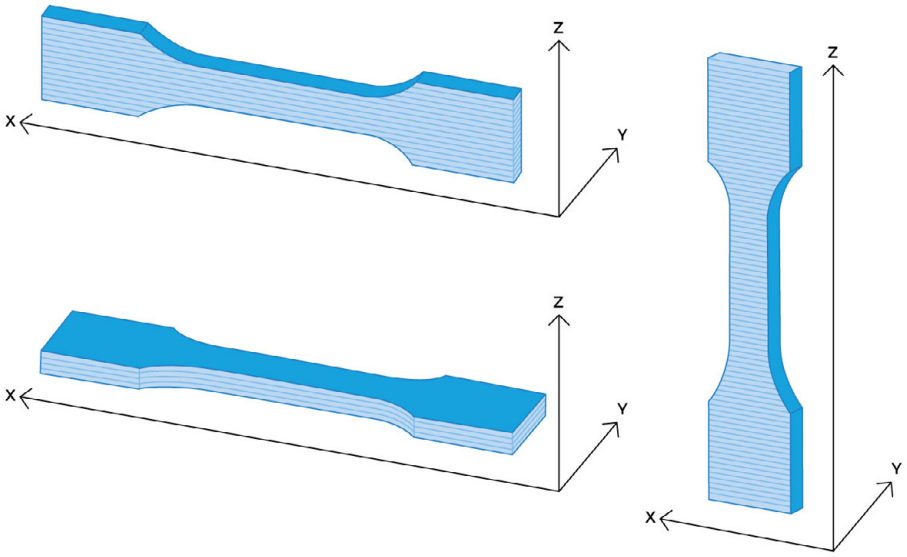

DISCLAIMER

The values and recommendations provided herein are given or accepted at your own risk. In view of variations in maintenance, processing, and neither Reflow nor its affiliates make any warranty relating to it or because of it. Neither Reflow nor its affiliates shall be responsible for the use of this information, or of any product, method or apparatus mentioned, and you must make your own determination of its suitability and completeness for your own use, for the protection of the environment, and for the health and safety of your employees and purchasers of your products. No warranty is made of the merchantability or fitness of any product; and nothing herein waives any of Reflow's conditions of sale. Specifications are subject to adaptation without prior notice.

PRICING OVERVIEW

At Reflow we believe that strong partnerships are the basis for transformative business. We present a unique and ever growing product offering with you while promoting sustainability together in our industry.

We apply volume discounting across each product variant. The pricing displayed below is a guide, however for orders above 100 kg and for repeat business, we work with you to find the optimal terms to grow our collaboration.

AMOUNT	PRICE
1 - 2 kg	€38
3 - 5 Kg	€36
6 - 10 kg	€34
11 - 49 kg	€32
50 - 99 kg	€30
100 kg +	on request

*The prices displayed are list prices and are subject to change without notice or further trade discount. We make every effort to provide you with the most accurate, up-to-date information but prices may alter due to unforeseen cost increases of imported products, raw materials, or currency fluctuations.

SOURCE TRACEABILITY

rPETG

Name	Recycled PLA
Chemical name	Polylactic acid, or polylactide
Geographic location	Benelux, Europe
Waste category	Post Industrial
Type of product	Food Packaging

PLA or Polylactic acid is a bioderived plastic and the leading filament choice for creators. Our materials begin life as cornstarch. While PLA can be broken down at the end of life, it does not naturally decompose at speed without industrial composting assistance. As a result, we take PLA packaging and recycle it to create rPLA filament, extending it's life by another cycle. Our rPLA is sourced from a consistent stream of recycled food packaging waste used in fruit boxes, straws and containers. It is collected, sorted and pre processed by a leading recycler in the Benelux region.

GET IN TOUCH

ronan@reflowfilament.com

reflowfilament.com